Sela

WITH CASTORS

Sela is a multifunctional stool that supports flexible sitting. The saddle seat provides an active sitting position and focuses on movement, by offering several ways to sit. Sela is mobile and easy to move and fits perfectly in activity-based offices.

Suits table height 720 mm

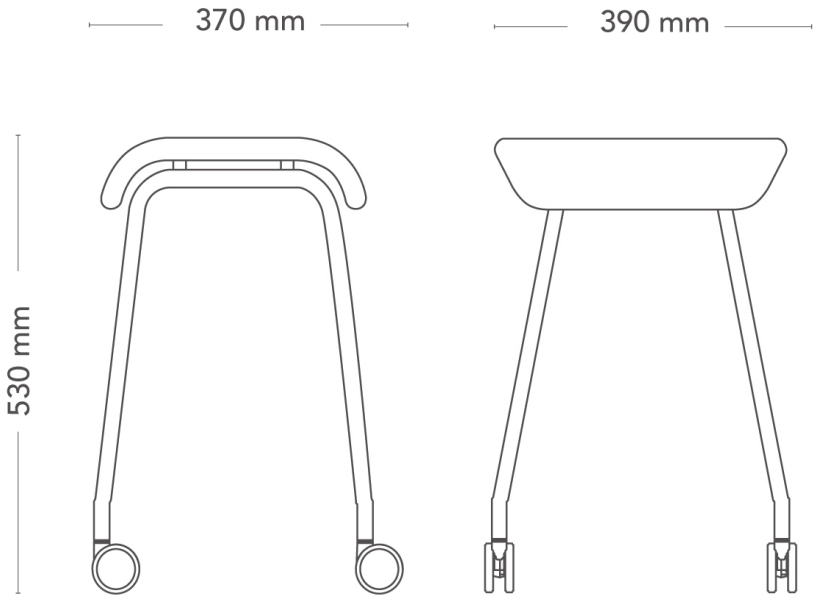

MODEL	Stool with castors	
VARIANTS	– Low – Medium – High	
ACCESSORIES	– RAL Classic	
DETAILS	– Low seat height fits table height approx. 720 mm, medium seat height fits table height approx. 900 mm and high seat height fits table height approx. 1100 mm.	
CONSTRUCTION	Stool with castors has powder-coated, bent steel pipe stand 19x2 mm (variety: EN10305-3 E220) with four legs and castors, diameter 55 mm. Seat in molded wood with cut polyether foam all around, and upholstered. No glue between fabric and foam.	
DIMENSIONS	Height: 530 mm Depth: 400 mm	Width: 370 mm Seat height: 530 mm
WEIGHT	3.8 kg	
TESTED	EN 16139:2013	
WARRANTY	5 years	

Möbelfakta

Sela

WITH CASTORS

Sela is a multifunctional stool that supports flexible sitting. The saddle seat provides an active sitting position and focuses on movement, by offering several ways to sit. Sela is mobile and easy to move and fits perfectly in activity-based offices.

Suits table height 900 mm

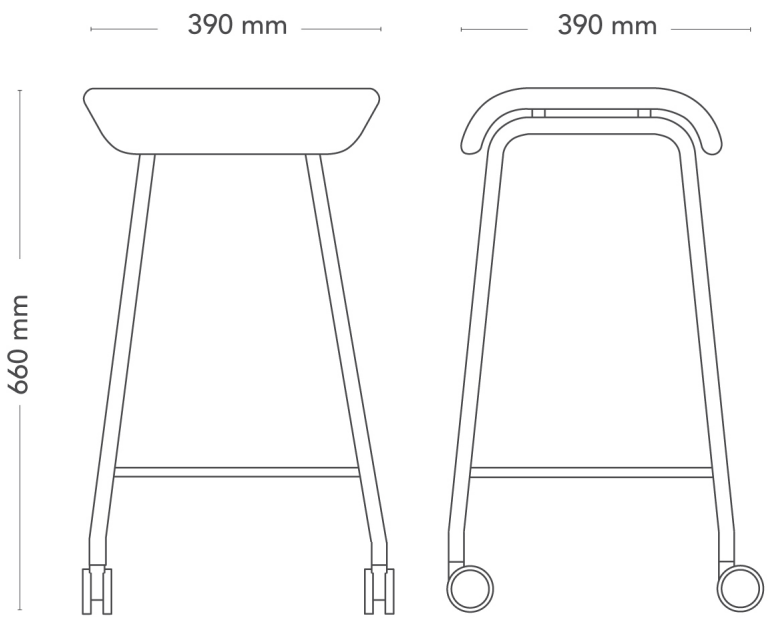

MODEL	Stool with castors	
VARIANTS	– Low – Medium – High	
ACCESSORIES	– RAL Classic	
DETAILS	– Low seat height fits table height approx. 720 mm, medium seat height fits table height approx. 900 mm and high seat height fits table height approx. 1100 mm.	
CONSTRUCTION	Stool with castors has powder-coated, bent steel pipe stand 19x2 mm (variety: EN10305-3 E220) with four legs and castors, diameter 55 mm. Seat in molded wood with cut polyether foam all around, and upholstered. No glue between fabric and foam.	
DIMENSIONS	Height: 660 mm Depth: 390 mm	Width: 390 mm Seat height: 660 mm
WEIGHT	4.8 kg	
TESTED	EN 16139:2013	
WARRANTY	5 years	

Möbelfakta

Sela

WITH CASTORS

Sela is a multifunctional stool that supports flexible sitting. The saddle seat provides an active sitting position and focuses on movement, by offering several ways to sit. Sela is mobile and easy to move and fits perfectly in activity-based offices.

Suits table height 1100 mm

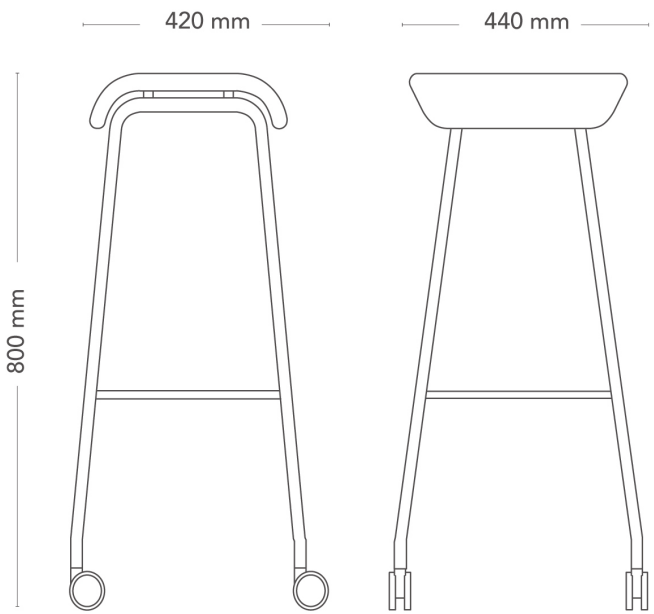

MODEL	Stool with castors
VARIANTS	– Low – Medium – High
ACCESSORIES	– RAL Classic
DETAILS	– Low seat height fits table height approx. 720 mm, medium seat height fits table height approx. 900 mm and high seat height fits table height approx. 1100 mm.
CONSTRUCTION	Stool with castors has powder-coated, bent steel pipe stand 19x2 mm (variety: EN10305-3 E220) with four legs and castors, diameter 55 mm. Seat in molded wood with cut polyether foam all around, and upholstered. No glue between fabric and foam.
DIMENSIONS	Height: 800 mm Width: 420 mm Depth: 440 mm
WEIGHT	5.2 kg
TESTED	EN 16139:2013
WARRANTY	5 years

Möbelfakta