Mingle Lounge

POD/ARMCHAIR WITH HIGH BACK AND SIDES, 1-SEATER

Mingle Lounge is a sofa series with generous dimensions, that provides relaxed seating in, for example, a lounge, hotel, restaurant or café. The many variants make it possible to create many shapes of seating in different sizes and heights. Bench, armchair, sofa and table can be varied and built together into both open and closed spaces. Place a two-seater sofa in the reception, or let Mingle meander through the office landscape.

Mingle Lounge offers great opportunities for furnishing flexible meeting places and room-in-room. In their high design with sides, both sofas and armchairs function as secluded seats for one or more people.

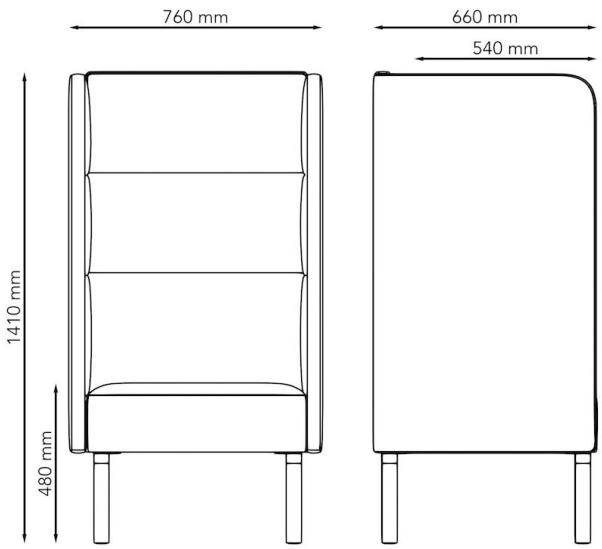

MODEL	Pod/meeting room	
VARIANTS	– Single-piece seat – Metal legs	– Seat with crumb gap – Wooden legs
ACCESSORIES	– Flexible table – RAL Classic – Power and cable management	
DETAILS	– Upholstery in one or two colours. – Stand-alone or connectable units.	
CONSTRUCTION	Wooden seating frame made of board and solid wood. Cold-foam padding, fully upholstered. Sledge frame, made of Ø12 mm steel tube. Ø30 mm straight metal legs, made of powder-coated steel tube. Round, straight solid-wood legs Ø45 mm.	
DIMENSIONS	Height: 1410 mm Depth: 660 mm	Width: 760 mm Seat height: 480 mm
WEIGHT	41.4 kg	
TESTED	EN 16139, EN 1728	
WARRANTY	5 years	

Möbelfakta

Mingle Lounge

POD/SOFA WITH HIGH BACK AND SIDES, 2-SEATER

Mingle Lounge is a sofa series with generous dimensions, that provides relaxed seating in, for example, a lounge, hotel, restaurant or café. The many variants make it possible to create many shapes of seating in different sizes and heights. Bench, armchair, sofa and table can be varied and built together into both open and closed spaces. Place a two-seater sofa in the reception, or let Mingle meander through the office landscape.

Mingle Lounge offers great opportunities for furnishing flexible meeting places and room-in-room. In their high design with sides, both sofas and armchairs function as secluded seats for one or more people.

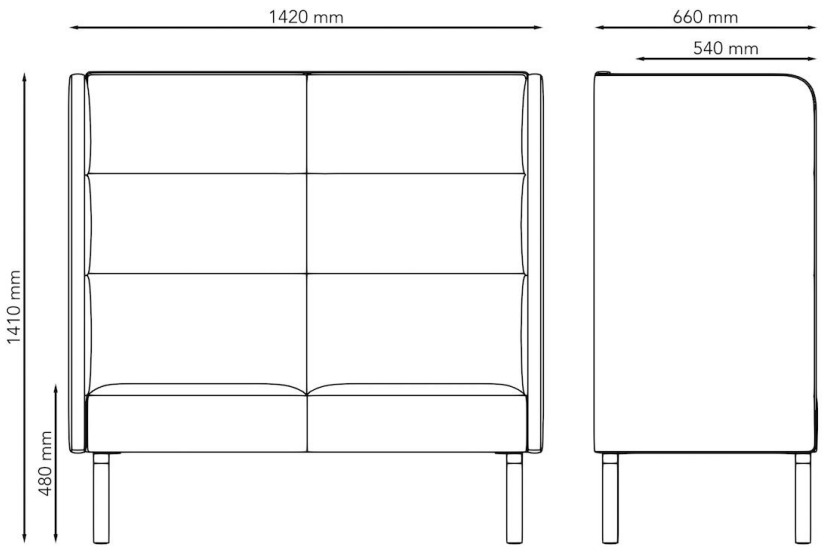

MODEL	Pod/meeting room	
VARIANTS	– Single-piece seat – Metal legs	– Seat with crumb gap – Wooden legs
ACCESSORIES	– Flexible table – RAL Classic – Power and cable management	
DETAILS	– Upholstery in one or two colours. – Stand-alone or connectable units.	
CONSTRUCTION	Wooden seating frame made of board and solid wood. Cold-foam padding, fully upholstered. Sledge frame, made of Ø12 mm steel tube. Ø30 mm straight metal legs, made of powder-coated steel tube. Round, straight solid-wood legs Ø45 mm.	
DIMENSIONS	Height: 1410 mm Depth: 660 mm	Width: 1420 mm Seat height: 480 mm
WEIGHT	57.3 kg	
TESTED	EN 16139, EN 1728	
WARRANTY	5 years	

Möbelfakta

Mingle Lounge

POD/SOFA WITH HIGH BACK AND SIDES, 3-SEATER

Mingle Lounge is a sofa series with generous dimensions, that provides relaxed seating in, for example, a lounge, hotel, restaurant or café. The many variants make it possible to create many shapes of seating in different sizes and heights. Bench, armchair, sofa and table can be varied and built together into both open and closed spaces. Place a two-seater sofa in the reception, or let Mingle meander through the office landscape.

Mingle Lounge offers great opportunities for furnishing flexible meeting places and room-in-room. In their high design with sides, both sofas and armchairs function as secluded seats for one or more people.

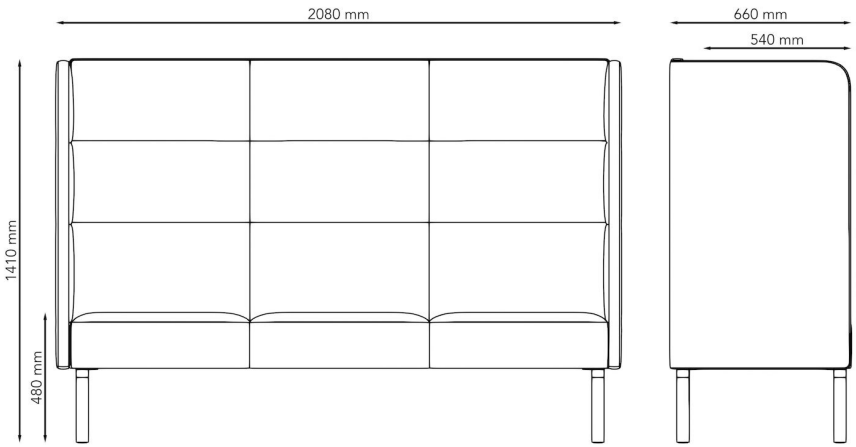

MODEL	Pod/meeting room	
VARIANTS	– Single-piece seat – Metal legs	– Seat with crumb gap – Wooden legs
ACCESSORIES	– Flexible table – RAL Classic – Power and cable management	
DETAILS	– Upholstery in one or two colours. – Stand-alone or connectable units.	
CONSTRUCTION	Wooden seating frame made of board and solid wood. Cold-foam padding, fully upholstered. Sledge frame, made of Ø12 mm steel tube. Ø30 mm straight metal legs, made of powder-coated steel tube. Round, straight solid-wood legs Ø45 mm.	
DIMENSIONS	Height: 1410 mm Depth: 660 mm	Width: 2080 mm Seat height: 480 mm
WEIGHT	71.0 kg	
TESTED	EN 16139, EN 1728	
WARRANTY	5 years	

Möbelfakta

Mingle Lounge

TABLE

Mingle Lounge is a sofa series with generous dimensions, that provides relaxed seating in, for example, a lounge, hotel, restaurant or café. The many variants make it possible to create many shapes of seating in different sizes and heights. Bench, armchair, sofa and table can be varied and built together into both open and closed spaces. Place a two-seater sofa in the reception, or let Mingle meander through the office landscape.

Mingle Lounge offers great opportunities for furnishing flexible meeting places and room-in-room. In their high design with sides, both sofas and armchairs function as secluded seats for one or more people.

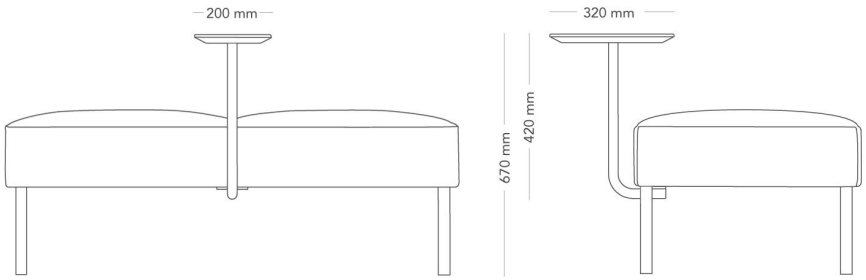

MODEL	Pod/meeting room	
VARIANTS	– Single-piece seat – Metal legs	– Seat with crumb gap – Wooden legs
ACCESSORIES	– Flexible table – RAL Classic – Power and cable management	
DETAILS	– Upholstery in one or two colours. – Stand-alone or connectable units.	
CONSTRUCTION	Wooden seating frame made of board and solid wood. Cold-foam padding, fully upholstered. Sledge frame, made of Ø12 mm steel tube. Ø30 mm straight metal legs, made of powder-coated steel tube. Round, straight solid-wood legs Ø45 mm.	
DIMENSIONS	Height: 420 mm Width: 200 mm Depth: 320 mm	
WEIGHT	5.9 kg	
TESTED	EN 16139, EN 1728	
WARRANTY	5 years	

Möbelfakta