Mingle

BENCH, 1-SEAT

Mingle is a modular sofa system designed to allow for flexible and comfortable seating solutions on a small surface. With straight or curved modules for seats and tables, as well as fixed combinations, Mingle offers many possibilities for modern and scalable lounge- and seating areas or meeting places.

The Mingle bench is available as a one-, two-, or three-seater and can be a standalone piece of furniture or part of a combination. For the two- and three-seater versions, a flexible table/writing pad is available as an optional accessory, which is attached beneath the seat.

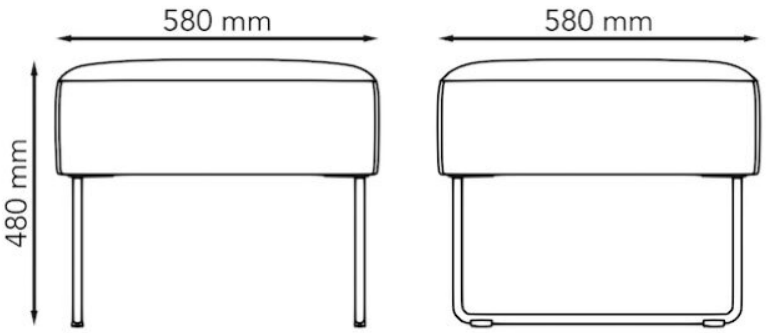

MODEL	Bench
VARIANTS	– Sledge – Wooden legs – Metal legs
ACCESSORIES	– Power and cable management – Other fabrics and leather – Flexible table – RAL Classic
DETAILS	– Exception Möbelfakta: sledge bases in chrome as well as wooden legs in oak and beech are not included in the Möbelfakta certification. Mingle can be upholstered in two different colors of fabric/leather from the same collection.
CONSTRUCTION	The frame is made of fiberboard and solid wood, with cold foam padding covered in fabric. The base frame is made of powder-coated or chrome-plated steel tubes, 12 mm in diameter, with plastic floor protectors. Straight metal legs are made of powder-coated steel tubes, 30 mm in diameter, or solid, straight wooden legs, 45 mm in diameter.
DIMENSIONS	Height: 480 mm Width: 580 mm Depth: 580 mm

Möbelfakta

WEIGHT	11.0 kg
TESTED	EN 16139, EN 1728
WARRANTY	5 years

Möbelfakta

Mingle

BENCH, 2-SEAT

Mingle is a modular sofa system designed to allow for flexible and comfortable seating solutions on a small surface. With straight or curved modules for seats and tables, as well as fixed combinations, Mingle offers many possibilities for modern and scalable lounge- and seating areas or meeting places.

The Mingle bench is available as a one-, two-, or three-seater and can be a standalone piece of furniture or part of a combination. For the two- and three-seater versions, a flexible table/writing pad is available as an optional accessory, which is attached beneath the seat.

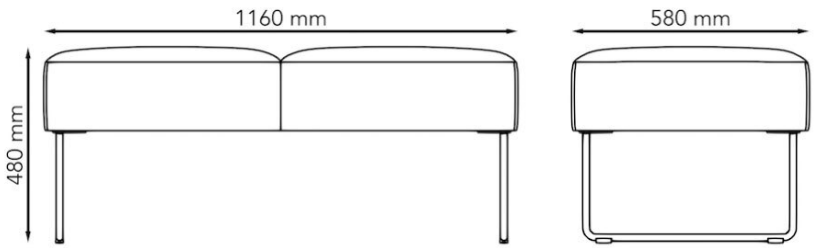

MODEL	Bench
VARIANTS	– Sledge – Wooden legs – Metal legs
ACCESSORIES	– Power and cable management – Other fabrics and leather – Flexible table – RAL Classic
DETAILS	– Exception Möbelfakta: sledge bases in chrome as well as wooden legs in oak and beech are not included in the Möbelfakta certification. Mingle can be upholstered in two different colors of fabric/leather from the same collection.
CONSTRUCTION	The frame is made of fiberboard and solid wood, with cold foam padding covered in fabric. The base frame is made of powder-coated or chrome-plated steel tubes, 12 mm in diameter, with plastic floor protectors. Straight metal legs are made of powder-coated steel tubes, 30 mm in diameter, or solid, straight wooden legs, 45 mm in diameter.
DIMENSIONS	Height: 480 mm Width: 1160 mm Depth: 580 mm

Möbelfakta

WEIGHT	18.0 kg
TESTED	EN 16139, EN 1728
WARRANTY	5 years

Möbelfakta

Mingle

BENCH, 3-SEAT

Mingle is a modular sofa system designed to allow for flexible and comfortable seating solutions on a small surface. With straight or curved modules for seats and tables, as well as fixed combinations, Mingle offers many possibilities for modern and scalable lounge- and seating areas or meeting places.

The Mingle bench is available as a one-, two-, or three-seater and can be a standalone piece of furniture or part of a combination. For the two- and three-seater versions, a flexible table/writing pad is available as an optional accessory, which is attached beneath the seat.

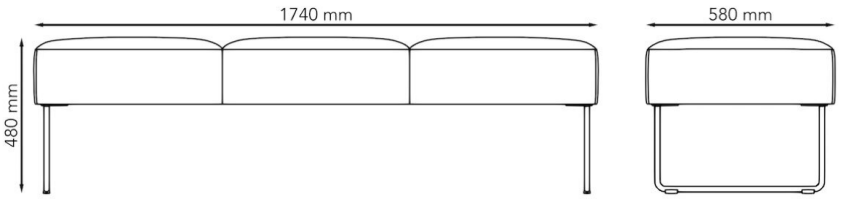

MODEL	Bench
VARIANTS	– Sledge – Wooden legs – Metal legs
ACCESSORIES	– Power and cable management – Other fabrics and leather – Flexible table – RAL Classic
DETAILS	– Exception Möbelfakta: sledge bases in chrome as well as wooden legs in oak and beech are not included in the Möbelfakta certification. Mingle can be upholstered in two different colors of fabric/leather from the same collection.
CONSTRUCTION	The frame is made of fiberboard and solid wood, with cold foam padding covered in fabric. The base frame is made of powder-coated or chrome-plated steel tubes, 12 mm in diameter, with plastic floor protectors. Straight metal legs are made of powder-coated steel tubes, 30 mm in diameter, or solid, straight wooden legs, 45 mm in diameter.
DIMENSIONS	Height: 480 mm Width: 1740 mm Depth: 580 mm

Möbelfakta

WEIGHT	27.0 kg
TESTED	EN 16139, EN 1728
WARRANTY	5 years

Möbelfakta