Mingle Lounge

BENCH, 1-SEATER

Mingle Lounge is a sofa series with generous dimensions, that provides relaxed seating in, for example, a lounge, hotel, restaurant or café. The many variants make it possible to create many shapes of seating in different sizes and heights. Bench, armchair, sofa and table can be varied and built together into both open and closed spaces. Place a two-seater sofa in the reception, or let Mingle meander through the office landscape.

Mingle Lounge bench is available with one, two or three seats and can be a free-standing piece or can be included as part of a Mingle Lounge combination. For two- and three-seater, there is an optional flexible table / tablet, which is attached under the seat.

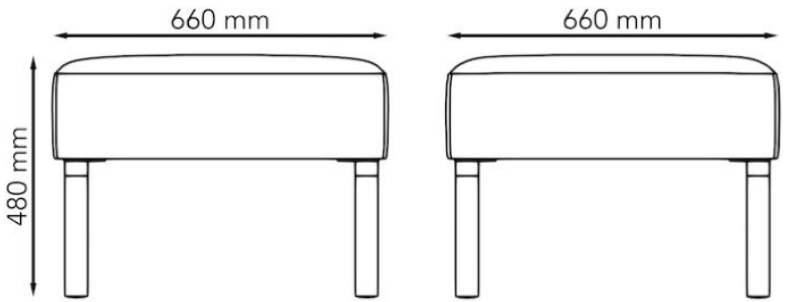

MODEL	Bench
VARIANTS	– Metal legs – Wooden legs
ACCESSORIES	– Flexible table – Power and cable management – RAL Classic
DETAILS	– Upholstery in one or two colours. – Stand-alone or connectable units.
CONSTRUCTION	Wooden seating frame made of wood-fibre board and solid wood. Cold-foam padding, fully upholstered. Sledge frame, made of Ø12 mm steel tube. Ø30 mm straight metal legs, made of powder-coated steel tube. Round, straight solid-wood legs Ø45 mm.
DIMENSIONS	Height: 480 mm Width: 660 mm Depth: 660 mm
WEIGHT	12.9 kg
TESTED	EN 16139, EN 1728
WARRANTY	5 years

Möbelfakta

Mingle Lounge

BENCH, 2-SEATER

Mingle Lounge is a sofa series with generous dimensions, that provides relaxed seating in, for example, a lounge, hotel, restaurant or café. The many variants make it possible to create many shapes of seating in different sizes and heights. Bench, armchair, sofa and table can be varied and built together into both open and closed spaces. Place a two-seater sofa in the reception, or let Mingle meander through the office landscape.

Mingle Lounge bench is available with one, two or three seats and can be a free-standing piece or can be included as part of a Mingle Lounge combination. For two- and three-seater, there is an optional flexible table / tablet, which is attached under the seat.

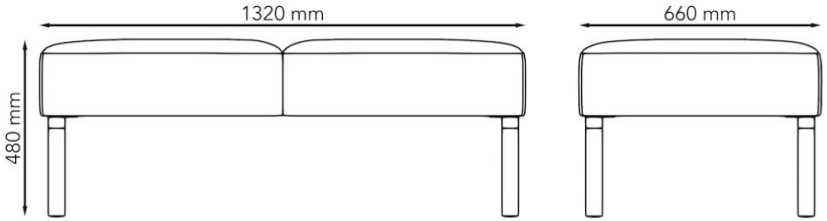

MODEL	Bench
VARIANTS	– Metal legs – Wooden legs
ACCESSORIES	– Flexible table – Power and cable management – RAL Classic
DETAILS	– Upholstery in one or two colours. – Stand-alone or connectable units.
CONSTRUCTION	Wooden seating frame made of wood-fibre board and solid wood. Cold-foam padding, fully upholstered. Sledge frame, made of Ø12 mm steel tube. Ø30 mm straight metal legs, made of powder-coated steel tube. Round, straight solid-wood legs Ø45 mm.
DIMENSIONS	Height: 480 mm Width: 1320 mm Depth: 660 mm
WEIGHT	20.8 kg
TESTED	EN 16139, EN 1728
WARRANTY	5 years

Möbelfakta

Mingle Lounge

BENCH, 3-SEATER

Mingle Lounge is a sofa series with generous dimensions, that provides relaxed seating in, for example, a lounge, hotel, restaurant or café. The many variants make it possible to create many shapes of seating in different sizes and heights. Bench, armchair, sofa and table can be varied and built together into both open and closed spaces. Place a two-seater sofa in the reception, or let Mingle meander through the office landscape.

Mingle Lounge bench is available with one, two or three seats and can be a free-standing piece or can be included as part of a Mingle Lounge combination. For two- and three-seater, there is an optional flexible table / tablet, which is attached under the seat.

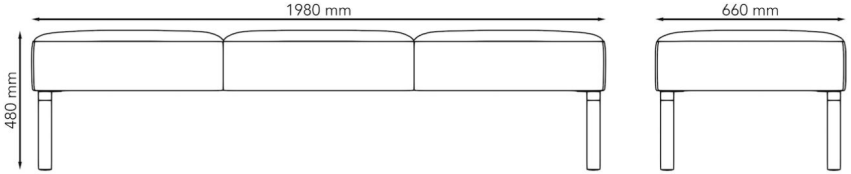

MODEL	Bench
VARIANTS	– Metal legs – Wooden legs
ACCESSORIES	– Flexible table – Power and cable management – RAL Classic
DETAILS	– Upholstery in one or two colours. – Stand-alone or connectable units.
CONSTRUCTION	Wooden seating frame made of wood-fibre board and solid wood. Cold-foam padding, fully upholstered. Sledge frame, made of Ø12 mm steel tube. Ø30 mm straight metal legs, made of powder-coated steel tube. Round, straight solid-wood legs Ø45 mm.
DIMENSIONS	Height: 480 mm Width: 1980 mm Depth: 660 mm
WEIGHT	31.0 kg
TESTED	EN 16139, EN 1728
WARRANTY	5 years

Möbelfakta

Mingle Lounge

FLEXIBLE TABLE

Mingle Lounge is a sofa series with generous dimensions, that provides relaxed seating in, for example, a lounge, hotel, restaurant or café. The many variants make it possible to create many shapes of seating in different sizes and heights. Bench, armchair, sofa and table can be varied and built together into both open and closed spaces. Place a two-seater sofa in the reception, or let Mingle meander through the office landscape.

Mingle Lounge bench is available with one, two or three seats and can be a free-standing piece or can be included as part of a Mingle Lounge combination. For two- and three-seater, there is an optional flexible table / tablet, which is attached under the seat.

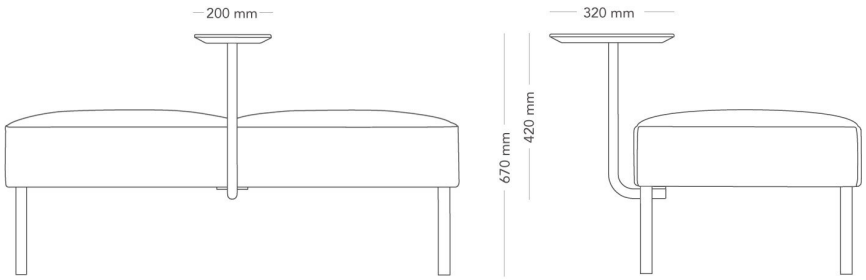

MODEL	Bench
VARIANTS	– Metal legs – Wooden legs
ACCESSORIES	– Flexible table – Power and cable management – RAL Classic
DETAILS	– Upholstery in one or two colours. – Stand-alone or connectable units.
CONSTRUCTION	Wooden seating frame made of wood-fibre board and solid wood. Cold-foam padding, fully upholstered. Sledge frame, made of Ø12 mm steel tube. Ø30 mm straight metal legs, made of powder-coated steel tube. Round, straight solid-wood legs Ø45 mm.
DIMENSIONS	Height: 420 mm Width: 200 mm Depth: 320 mm
WEIGHT	5.9 kg
TESTED	EN 16139, EN 1728
WARRANTY	5 years

Möbelfakta