Collaborate

A-SHAPED METAL LEGS

Collaborate is an exclusive meeting and project table for collaboration, communication and knowledge sharing. It supports the dynamics of project work, and the robust design mirrors warmth and contributes to an inviting atmosphere.

Height 1030 mm

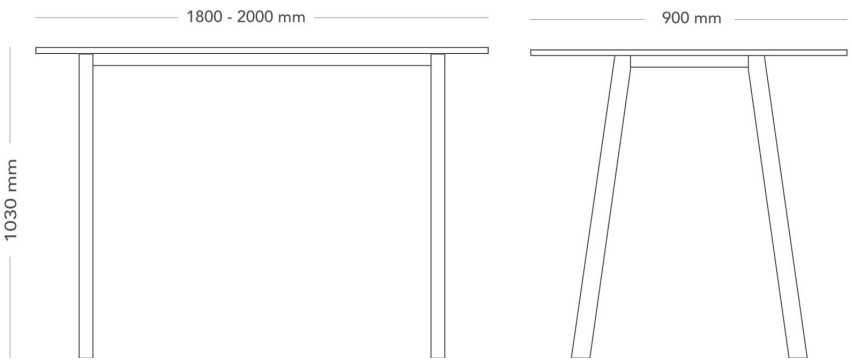

MODEL	Table, high
VARIANTS	– –
ACCESSORIES	– Power and cable management – RAL Classic
DETAILS	– Tabletops are available with either a straight or beveled edge. Tabletops with a width of ≥1400 mm have a crosswise veneer direction. The tabletop can be equipped with cutouts for power and cable management or fitted with a cable hatch.
CONSTRUCTION	The frame consists of a metal structure with legs made of square metal tubing (60 x 30 mm). The tabletop with a beveled edge has a 22 mm MDF core, while the tabletop with a straight edge has a 22 mm wood fiber core. Surface coating ranges from 0.2 to 2 mm depending on the chosen material. The tables are available with a smooth tabletop or an integrated cable hatch with steel hinges. The hatch design matches the tabletop. The cable hatch includes an unconfigured cable tray with two Ø60 mm holes per hatch; configurations are ordered separately.
DIMENSIONS	Height: 1030 mm Length: 1800 - 2000 mm Width: 900 mm
WEIGHT	52 kg

Möbelfakta

TESTED	Testad acc to EN 15372:2016 nivå 3, EN 1730:2012.
WARRANTY	5 years

Möbelfakta