Create Seating

SEATING MODULES

Create Seating is a multifunctional and modular storage system designed to enhance its surroundings and inspire creative expression. With unlimited configuration possibilities the Create could act as a divider or built to suit your needs. With the freedom to fuse materials and colours the choices are infinite.

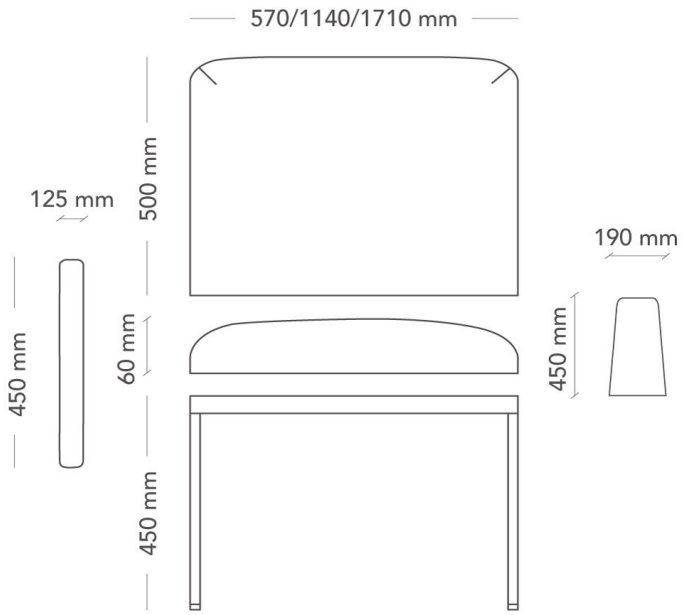

MODEL	Sofa and storage	
ACCESSORIES	– Power and cable management	
CONSTRUCTION	Frame made of plywood and elastic webbing with cold foam padding, upholstered in fabric. Legs made of powder-coated steel tubes, 30 × 15 mm, with plastic floor protectors. Storage modules made of 12 mm lacquered MDF. Doors and drawer fronts in lacquer or veneer, made of 12 mm MDF. Adjustable feet/connecting fittings made of plastic and steel. Fabric-covered back panels made of 12 mm MDF and cold foam, upholstered in fabric. Door hinges and fittings made of steel.	
DIMENSIONS	Height: 875 mm Depth: 570 mm	Width: 570/1140/1710 mm Seat height: 450 mm
WEIGHT	4 - 12 kg	
TESTED	EN 16139, EN 1728, EN 1022	
WARRANTY	5 years	

Möbelfakta

Create Seating

STORAGE MODULE, METAL

Create Seating is a multifunctional and modular storage system designed to enhance its surroundings and inspire creative expression. With unlimited configuration possibilities the Create could act as a divider or built to suit your needs. With the freedom to fuse materials and colours the choices are infinite.

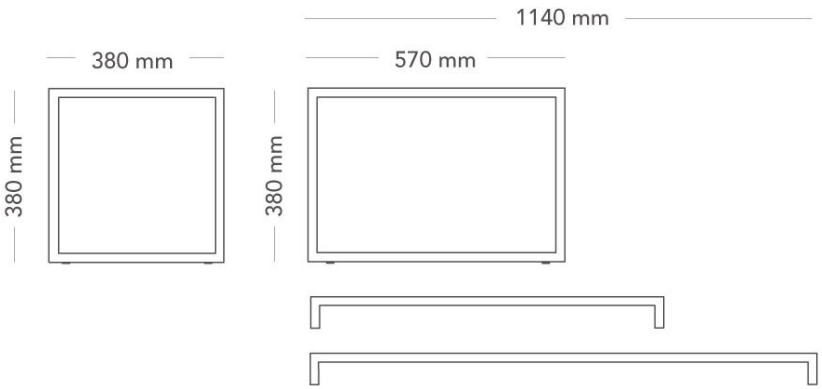

MODEL	Sofa and storage
ACCESSORIES	– Power and cable management
CONSTRUCTION	Frame made of plywood and elastic webbing with cold foam padding, upholstered in fabric. Legs made of powder-coated steel tubes, 30 × 15 mm, with plastic floor protectors. Storage modules made of 12 mm lacquered MDF. Doors and drawer fronts in lacquer or veneer, made of 12 mm MDF. Adjustable feet/connecting fittings made of plastic and steel. Fabric-covered back panels made of 12 mm MDF and cold foam, upholstered in fabric. Door hinges and fittings made of steel.
DIMENSIONS	Height: 380 mm Width: 380/570 mm Depth: 380 mm
WEIGHT	5 - 6 kg
TESTED	EN 16139, EN 1728, EN 1022
WARRANTY	5 years

Möbelfakta

Create Seating

STORAGE MODULE, MDF

Create Seating is a multifunctional and modular storage system designed to enhance its surroundings and inspire creative expression. With unlimited configuration possibilities the Create could act as a divider or built to suit your needs. With the freedom to fuse materials and colours the choices are infinite.

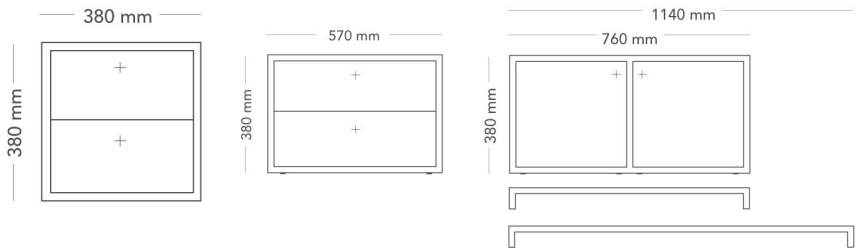

MODEL	Sofa and storage
ACCESSORIES	– Power and cable management
CONSTRUCTION	Frame made of plywood and elastic webbing with cold foam padding, upholstered in fabric. Legs made of powder-coated steel tubes, 30 × 15 mm, with plastic floor protectors. Storage modules made of 12 mm lacquered MDF. Doors and drawer fronts in lacquer or veneer, made of 12 mm MDF. Adjustable feet/connecting fittings made of plastic and steel. Fabric-covered back panels made of 12 mm MDF and cold foam, upholstered in fabric. Door hinges and fittings made of steel.
DIMENSIONS	Height: 380 mm Width: 570 mm Depth: 380 mm
WEIGHT	6 - 18 kg
TESTED	EN 16139, EN 1728, EN 1022
WARRANTY	5 years

Möbelfakta