Neet

DESK SIT/STAND, MOTOR OPERATED

Neet is a height-adjustable desk that suits all workspaces. The table has a slim design and takes up less space than a classic desk. Neet is perfect for the home office but at the same time robust enough to be used daily in the workplace. Compact design requires less packaging material and storage space, and reduces the climate footprint during transport.

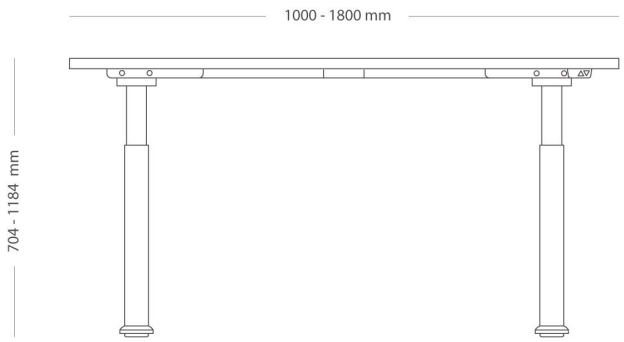

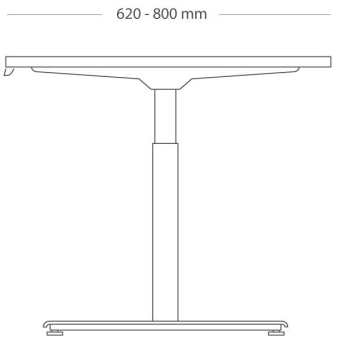

MODEL	Desk, sit/stand	
ACCESSORIES	– Power and cable management – Accessories for table screens – Table screen – Standing mat	
DETAILS	– Exception to the Möbelfalta cerification: table top lengths 1000 and 1800 mm are not included in the ceritfication. Neet is sold as a completet workstation with table top and leg frame.	
CONSTRUCTION	Height-adjustable desk frame with T-foot made of powder-coated sheet steel. Adjustable plastic feet.	
DIMENSIONS	Height: 704-1184 mm Width: 620 - 800 mm	Length: 1000 - 1800 mm Stroke: 480 mm
TESTED	EN 527-1, EN 527-2, EN 527-3 - Durability height adjustment.	
WARRANTY	5 years	

Möbelfakta