Hybe

WITH CASTORS

Hybe is a hybrid series of flexible seating and meeting places/pods designed by Form Us With Love. Hybe exists to fulfill the need for adaptable and mobile spaces in the versatile office, promoting productivity and creativity.

1-seater, four-leg frame with castors.

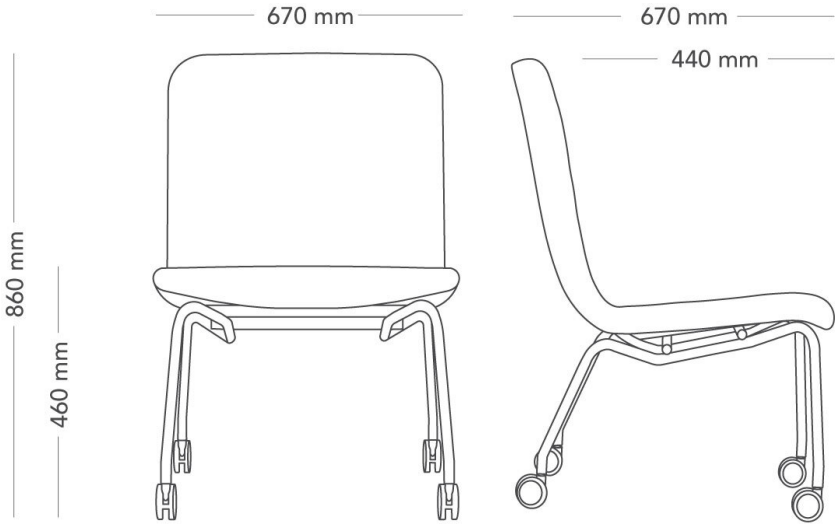

MODEL	Armchair	
VARIANTS	– Without armrests – With armrests – With screen	
ACCESSORIES	– Alternative colours and materials	
DETAILS	– Front castors have brakes.	
CONSTRUCTION	Molded wood seat shell with foam padding. 22 mm steel tube frame, with castors. Armrest as option, with 22 mm steel tube frame, and top with 22 mm MDF core, and beveled edge. Surface coating in different materials, thickness 0.2-2 mm depending on material choice. Upholstered screens as option, made from wood-fiber board with polyethylene surface, foam padding. Fastened with 4 mm sheet-steel brackets.	
DIMENSIONS	Height: 860 mm Depth: 670 mm	Width: 670 mm Seat height: 460 mm
WEIGHT	10.9 kg	
TESTED	EN 16139:2013	
WARRANTY	5 years	

Möbelfakta

Hybe

ARMREST RIGHT/LEFT

Hybe is a hybrid series of flexible seating and meeting places/pods designed by Form Us With Love. Hybe exists to fulfill the need for adaptable and mobile spaces in the versatile office, promoting productivity and creativity.

1-seater, four-leg frame with castors.

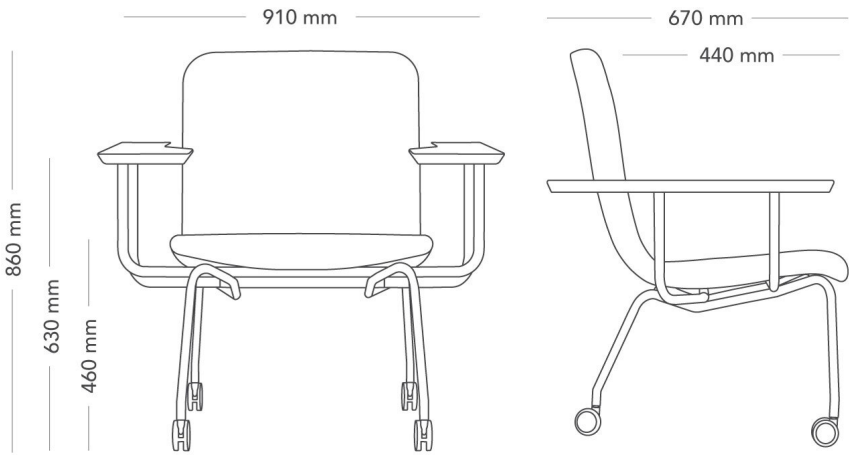

MODEL	Armchair	
VARIANTS	– Without armrests – With armrests – With screen	
ACCESSORIES	– Alternative colours and materials	
DETAILS	– Front castors have brakes.	
CONSTRUCTION	Molded wood seat shell with foam padding. 22 mm steel tube frame, with castors. Armrest as option, with 22 mm steel tube frame, and top with 22 mm MDF core, and beveled edge. Surface coating in different materials, thickness 0.2-2 mm depending on material choice. Upholstered screens as option, made from wood-fiber board with polyethylene surface, foam padding. Fastened with 4 mm sheet-steel brackets.	
DIMENSIONS	Height: 860 mm Depth: 670 mm	Width: 910 mm Seat height: 460 mm
WEIGHT	10.9 kg	
TESTED	EN 16139:2013	
WARRANTY	5 years	

Möbelfakta