Ori

2-SEATER MODULE, ARMREST LEFT

Ori is a decorative, modular sofa system in the interface between home and office. By combining form and function, Ori meets the need for well-designed and comfortable furniture in tomorrow's office. Ori is avalable with accessories such as power sockets and table.

Buildable sofa modules to create seating units for different types of tasks such as focused work or meetings.

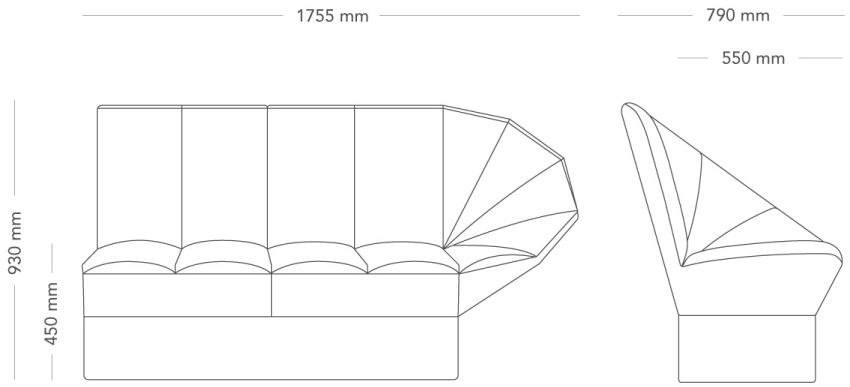

MODEL	U-shaped sofa	
ACCESSORIES	– Electrical accessories – Table – Adjustable feet – Cushion	
DETAILS	– Different fabrics can be specified on the plinth and seat. The seating modules caneasily be re-arranged into other setups and more modules can be addes as needed.	
CONSTRUCTION	Frame and plinth consisting of plywood, solid wood, OSB board and MDF. Fixed plastic feet. Steel fittings connecting seat and back. Connecting fitting made of lacquered steel wire. Molded PUR-foam parts. Sewn textile upholstery. Adjustable steel feet with plastic bottom as option. Sofa table as option; lacquered steel frame, table top in MDF with veneered surface, lacquered full-radius beveled edge. Optional cushion, textile case with polyester padding.	
DIMENSIONS	Height: 930 mm Depth: 790 mm Sit depth: 550 mm	Width: 1755 mm Seat height: 450 mm
WEIGHT	64.9 kg	
TESTED	EN 1335 level 1	

Möbelfakta

WARRANTY	5 years

Möbelfakta

Ori

2-SEATER MODULE, ARMREST LEFT

Ori is a decorative, modular sofa system in the interface between home and office. By combining form and function, Ori meets the need for well-designed and comfortable furniture in tomorrow's office. Ori is avalable with accessories such as power sockets and table.

Buildable sofa modules to create seating units for different types of tasks such as focused work or meetings.

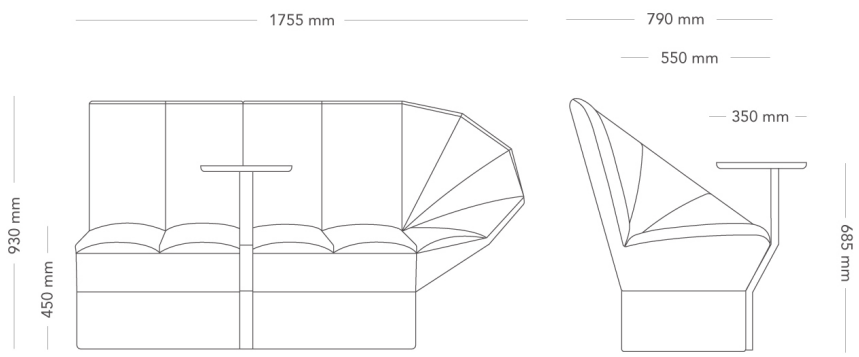

MODEL	U-shaped sofa
ACCESSORIES	– Electrical accessories – Table – Adjustable feet – Cushion
DETAILS	– Different fabrics can be specified on the plinth and seat. The seating modules caneasily be re-arranged into other setups and more modules can be addes as needed.
CONSTRUCTION	Frame and plinth consisting of plywood, solid wood, OSB board and MDF. Fixed plastic feet. Steel fittings connecting seat and back. Connecting fitting made of lacquered steel wire. Molded PUR-foam parts. Sewn textile upholstery. Adjustable steel feet with plastic bottom as option. Sofa table as option; lacquered steel frame, table top in MDF with veneered surface, lacquered full-radius beveled edge. Optional cushion, textile case with polyester padding.
DIMENSIONS	Height: 930 mm Width: 1755 mm Depth: 790 mm Seat height: 450 mm Sit depth: 550 mm
WEIGHT	64.9 kg
TESTED	EN 1335 level 1

Möbelfakta

WARRANTY	5 years

Möbelfakta

Ori

2-SEATER MODULE, ARMREST RIGHT

Ori is a decorative, modular sofa system in the interface between home and office. By combining form and function, Ori meets the need for well-designed and comfortable furniture in tomorrow's office. Ori is avalable with accessories such as power sockets and table.

Buildable sofa modules to create seating units for different types of tasks such as focused work or meetings.

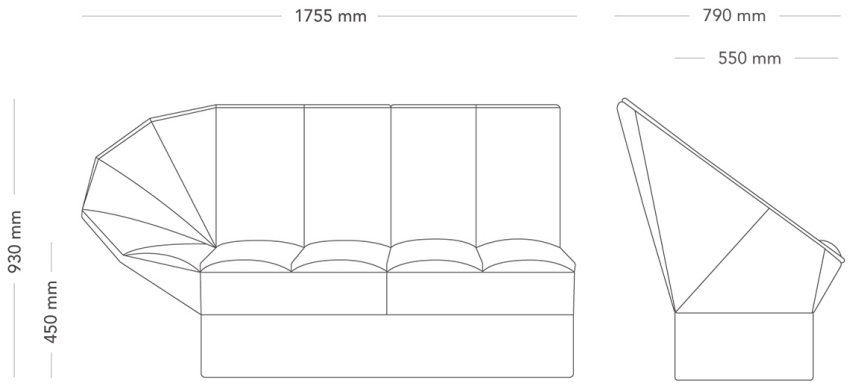

MODEL	U-shaped sofa	
ACCESSORIES	– Electrical accessories – Table – Adjustable feet – Cushion	
DETAILS	– Different fabrics can be specified on the plinth and seat. The seating modules caneasily be re-arranged into other setups and more modules can be addes as needed.	
CONSTRUCTION	Frame and plinth consisting of plywood, solid wood, OSB board and MDF. Fixed plastic feet. Steel fittings connecting seat and back. Connecting fitting made of lacquered steel wire. Molded PUR-foam parts. Sewn textile upholstery. Adjustable steel feet with plastic bottom as option. Sofa table as option; lacquered steel frame, table top in MDF with veneered surface, lacquered full-radius beveled edge. Optional cushion, textile case with polyester padding.	
DIMENSIONS	Height: 930 mm Depth: 790 mm Sit depth: 550 mm	Width: 1755 mm Seat height: 450 mm
WEIGHT	64.9 kg	
TESTED	EN 1335 level 1	

Möbelfakta

WARRANTY	5 years

Möbelfakta

Ori

2-SEATER MODULE, ARMREST RIGHT

Ori is a decorative, modular sofa system in the interface between home and office. By combining form and function, Ori meets the need for well-designed and comfortable furniture in tomorrow's office. Ori is avalable with accessories such as power sockets and table.

Buildable sofa modules to create seating units for different types of tasks such as focused work or meetings.

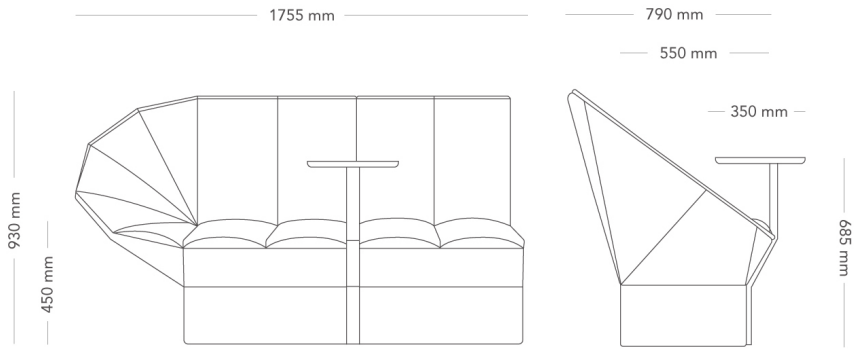

MODEL	U-shaped sofa
ACCESSORIES	– Electrical accessories – Table – Adjustable feet – Cushion
DETAILS	– Different fabrics can be specified on the plinth and seat. The seating modules caneasily be re-arranged into other setups and more modules can be addes as needed.
CONSTRUCTION	Frame and plinth consisting of plywood, solid wood, OSB board and MDF. Fixed plastic feet. Steel fittings connecting seat and back. Connecting fitting made of lacquered steel wire. Molded PUR-foam parts. Sewn textile upholstery. Adjustable steel feet with plastic bottom as option. Sofa table as option; lacquered steel frame, table top in MDF with veneered surface, lacquered full-radius beveled edge. Optional cushion, textile case with polyester padding.
DIMENSIONS	Height: 930 mm Width: 1755 mm Depth: 790 mm Seat height: 450 mm Sit depth: 550 mm
WEIGHT	64.9 kg
TESTED	EN 1335 level 1

Möbelfakta

WARRANTY	5 years

Möbelfakta

Ori

INNER CORNER MODULE

Ori is a decorative, modular sofa system in the interface between home and office. By combining form and function, Ori meets the need for well-designed and comfortable furniture in tomorrow's office. Ori is avalable with accessories such as power sockets and table.

Buildable sofa modules to create seating units for different types of tasks such as focused work or meetings.

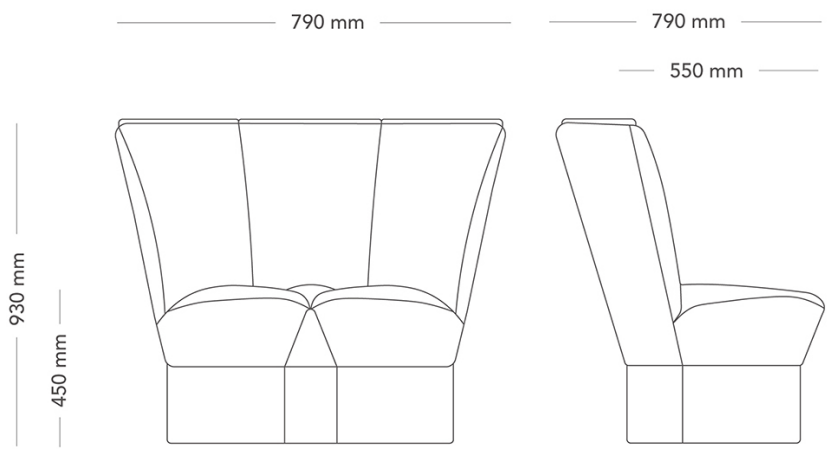

MODEL	U-shaped sofa	
ACCESSORIES	– Electrical accessories – Table – Adjustable feet – Cushion	
DETAILS	– Different fabrics can be specified on the plinth and seat. The seating modules caneasily be re-arranged into other setups and more modules can be addes as needed.	
CONSTRUCTION	Frame and plinth consisting of plywood, solid wood, OSB board and MDF. Fixed plastic feet. Steel fittings connecting seat and back. Connecting fitting made of lacquered steel wire. Molded PUR-foam parts. Sewn textile upholstery. Adjustable steel feet with plastic bottom as option. Sofa table as option; lacquered steel frame, table top in MDF with veneered surface, lacquered full-radius beveled edge. Optional cushion, textile case with polyester padding.	
DIMENSIONS	Height: 930 mm Depth: 790 mm Sit depth: 550 mm	Width: 790 mm Seat height: 450 mm
WEIGHT	29.0 kg	
TESTED	EN 1335 level 1	

Möbelfakta

WARRANTY	5 years

Möbelfakta

Ori

2-SEATER MODULE

Ori is a decorative, modular sofa system in the interface between home and office. By combining form and function, Ori meets the need for well-designed and comfortable furniture in tomorrow's office. Ori is avalable with accessories such as power sockets and table.

Buildable sofa modules to create seating units for different types of tasks such as focused work or meetings.

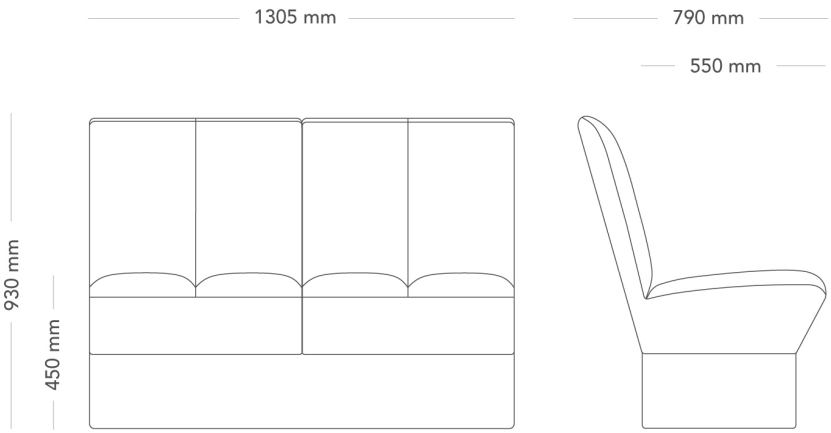

MODEL	U-shaped sofa	
ACCESSORIES	– Electrical accessories – Table – Adjustable feet – Cushion	
DETAILS	– Different fabrics can be specified on the plinth and seat. The seating modules caneasily be re-arranged into other setups and more modules can be addes as needed.	
CONSTRUCTION	Frame and plinth consisting of plywood, solid wood, OSB board and MDF. Fixed plastic feet. Steel fittings connecting seat and back. Connecting fitting made of lacquered steel wire. Molded PUR-foam parts. Sewn textile upholstery. Adjustable steel feet with plastic bottom as option. Sofa table as option; lacquered steel frame, table top in MDF with veneered surface, lacquered full-radius beveled edge. Optional cushion, textile case with polyester padding.	
DIMENSIONS	Height: 930 mm Depth: 790 mm Sit depth: 550 mm	Width: 1305 mm Seat height: 450 mm
WEIGHT	57.7 kg	
TESTED	EN 1335 level 1	

Möbelfakta

WARRANTY	5 years

Möbelfakta

Ori

2-SEATER MODULE

Ori is a decorative, modular sofa system in the interface between home and office. By combining form and function, Ori meets the need for well-designed and comfortable furniture in tomorrow's office. Ori is avalable with accessories such as power sockets and table.

Buildable sofa modules to create seating units for different types of tasks such as focused work or meetings.

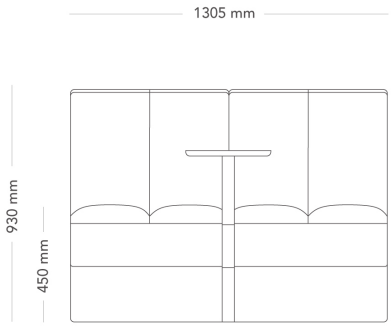

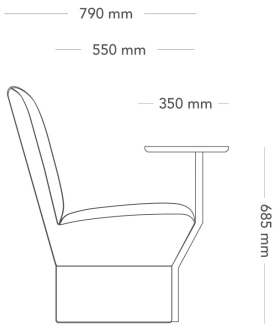

MODEL	U-shaped sofa	
ACCESSORIES	– Electrical accessories – Table – Adjustable feet – Cushion	
DETAILS	– Different fabrics can be specified on the plinth and seat. The seating modules caneasily be re-arranged into other setups and more modules can be addes as needed.	
CONSTRUCTION	Frame and plinth consisting of plywood, solid wood, OSB board and MDF. Fixed plastic feet. Steel fittings connecting seat and back. Connecting fitting made of lacquered steel wire. Molded PUR-foam parts. Sewn textile upholstery. Adjustable steel feet with plastic bottom as option. Sofa table as option; lacquered steel frame, table top in MDF with veneered surface, lacquered full-radius beveled edge. Optional cushion, textile case with polyester padding.	
DIMENSIONS	Height: 930 mm Depth: 790 mm Sit depth: 550 mm	Width: 1305 mm Seat height: 450 mm
WEIGHT	57.7 kg	
TESTED	EN 1335 level 1	

Möbelfakta

WARRANTY	5 years

Möbelfakta