Mingle Lounge

SOFA, 2-SEATER

Mingle Lounge is a sofa series with generous dimensions, that provides relaxed seating in, for example, a lounge, hotel, restaurant or café. The many variants make it possible to create many shapes of seating in different sizes and heights. Bench, armchair, sofa and table can be varied and built together into both open and closed spaces. Place a two-seater sofa in the reception, or let Mingle meander through the office landscape.

Mingle Lounge sofa is available with two or three seats and is easy to vary with two back heights, and with or without armrests / high sides. In the high design, the sofa also serves as a slightly more secluded seat for furnishing the room-in-room and meeting area. A flexible table / tablet is available as an option, which is attached under the seat.

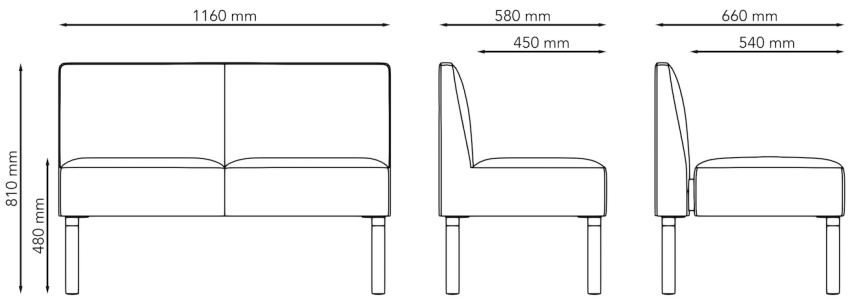

MODEL	Sofa	
VARIANTS	– Single-piece seat – Low back – Armrest – Wooden legs	– Seat with crumb gap – High back – Metal legs
ACCESSORIES	– Flexible table – Power and cable management – RAL Classic	
DETAILS	– Upholstery in one or two colours of fabric or leather. – Stand-alone or connectable units.	
CONSTRUCTION	Wooden seating frame made of board and solid wood. Cold-foam padding, fully upholstered. Round, straight solid-wood legs Ø45 mm.	
DIMENSIONS	Height: 810 mm Depth: 660 mm	Width: 1320 mm Seat height: 480 mm
WEIGHT	27.7 kg	
TESTED	EN 16139, EN1728	

Möbelfakta

WARRANTY	5 years

Möbelfakta

Mingle Lounge

SOFA, 2-SEATER, ARMREST RIGHT & LEFT

Mingle Lounge is a sofa series with generous dimensions, that provides relaxed seating in, for example, a lounge, hotel, restaurant or café. The many variants make it possible to create many shapes of seating in different sizes and heights. Bench, armchair, sofa and table can be varied and built together into both open and closed spaces. Place a two-seater sofa in the reception, or let Mingle meander through the office landscape.

Mingle Lounge sofa is available with two or three seats and is easy to vary with two back heights, and with or without armrests / high sides. In the high design, the sofa also serves as a slightly more secluded seat for furnishing the room-in-room and meeting area. A flexible table / tablet is available as an option, which is attached under the seat.

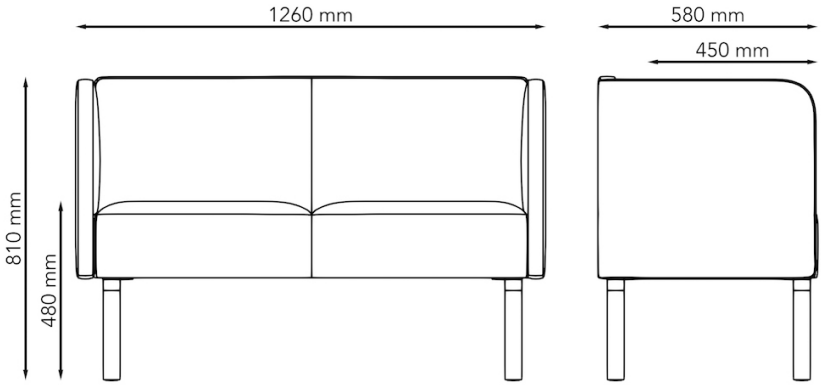

MODEL	Sofa	
VARIANTS	– Single-piece seat – Low back – Armrest – Wooden legs	– Seat with crumb gap – High back – Metal legs
ACCESSORIES	– Flexible table – Power and cable management – RAL Classic	
DETAILS	– Upholstery in one or two colours of fabric or leather. – Stand-alone or connectable units.	
CONSTRUCTION	Wooden seating frame made of board and solid wood. Cold-foam padding, fully upholstered. Round, straight solid-wood legs Ø45 mm.	
DIMENSIONS	Height: 810 mm Depth: 660 mm	Width: 1420 mm Seat height: 480 mm
WEIGHT	42.5 kg	
TESTED	EN 16139, EN1728	

Möbelfakta

WARRANTY	5 years

Möbelfakta

Mingle Lounge

SOFA, 2-SEATER

Mingle Lounge is a sofa series with generous dimensions, that provides relaxed seating in, for example, a lounge, hotel, restaurant or café. The many variants make it possible to create many shapes of seating in different sizes and heights. Bench, armchair, sofa and table can be varied and built together into both open and closed spaces. Place a two-seater sofa in the reception, or let Mingle meander through the office landscape.

Mingle Lounge sofa is available with two or three seats and is easy to vary with two back heights, and with or without armrests / high sides. In the high design, the sofa also serves as a slightly more secluded seat for furnishing the room-in-room and meeting area. A flexible table / tablet is available as an option, which is attached under the seat.

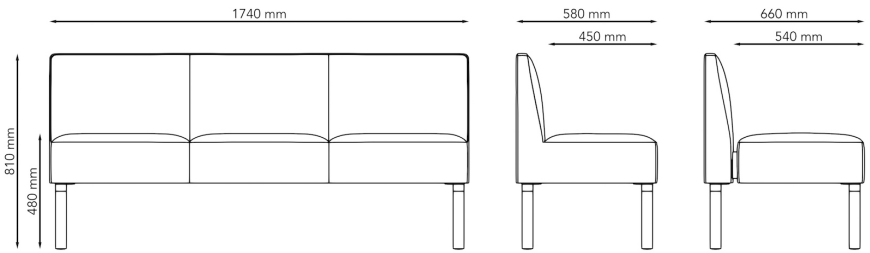

MODEL	Sofa	
VARIANTS	– Single-piece seat – Low back – Armrest – Wooden legs	– Seat with crumb gap – High back – Metal legs
ACCESSORIES	– Flexible table – Power and cable management – RAL Classic	
DETAILS	– Upholstery in one or two colours of fabric or leather. – Stand-alone or connectable units.	
CONSTRUCTION	Wooden seating frame made of board and solid wood. Cold-foam padding, fully upholstered. Round, straight solid-wood legs Ø45 mm.	
DIMENSIONS	Height: 810 mm Depth: 660 mm	Width: 1980 mm Seat height: 480 mm
WEIGHT	36.8 kg	
TESTED	EN 16139, EN1728	

Möbelfakta

WARRANTY	5 years

Möbelfakta

Mingle Lounge

SOFA, 3-SEATER, ARMREST RIGHT & LEFT

Mingle Lounge is a sofa series with generous dimensions, that provides relaxed seating in, for example, a lounge, hotel, restaurant or café. The many variants make it possible to create many shapes of seating in different sizes and heights. Bench, armchair, sofa and table can be varied and built together into both open and closed spaces. Place a two-seater sofa in the reception, or let Mingle meander through the office landscape.

Mingle Lounge sofa is available with two or three seats and is easy to vary with two back heights, and with or without armrests / high sides. In the high design, the sofa also serves as a slightly more secluded seat for furnishing the room-in-room and meeting area. A flexible table / tablet is available as an option, which is attached under the seat.

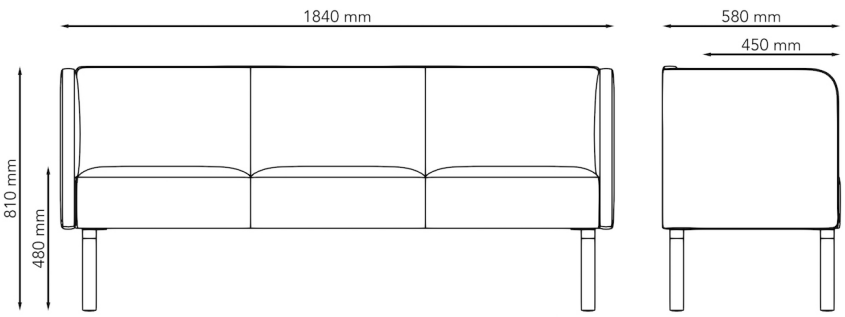

MODEL	Sofa	
VARIANTS	– Single-piece seat – Low back – Armrest – Wooden legs	– Seat with crumb gap – High back – Metal legs
ACCESSORIES	– Flexible table – Power and cable management – RAL Classic	
DETAILS	– Upholstery in one or two colours of fabric or leather. – Stand-alone or connectable units.	
CONSTRUCTION	Wooden seating frame made of board and solid wood. Cold-foam padding, fully upholstered. Round, straight solid-wood legs Ø45 mm.	
DIMENSIONS	Height: 810 mm Depth: 660 mm	Width: 2080 mm Seat height: 480 mm
WEIGHT	51.6 kg	
TESTED	EN 16139, EN1728	

Möbelfakta

WARRANTY	5 years

Möbelfakta

Mingle Lounge

SOFA, 2-SEATER, HIGH BACK

Mingle Lounge is a sofa series with generous dimensions, that provides relaxed seating in, for example, a lounge, hotel, restaurant or café. The many variants make it possible to create many shapes of seating in different sizes and heights. Bench, armchair, sofa and table can be varied and built together into both open and closed spaces. Place a two-seater sofa in the reception, or let Mingle meander through the office landscape.

Mingle Lounge sofa is available with two or three seats and is easy to vary with two back heights, and with or without armrests / high sides. In the high design, the sofa also serves as a slightly more secluded seat for furnishing the room-in-room and meeting area. A flexible table / tablet is available as an option, which is attached under the seat.

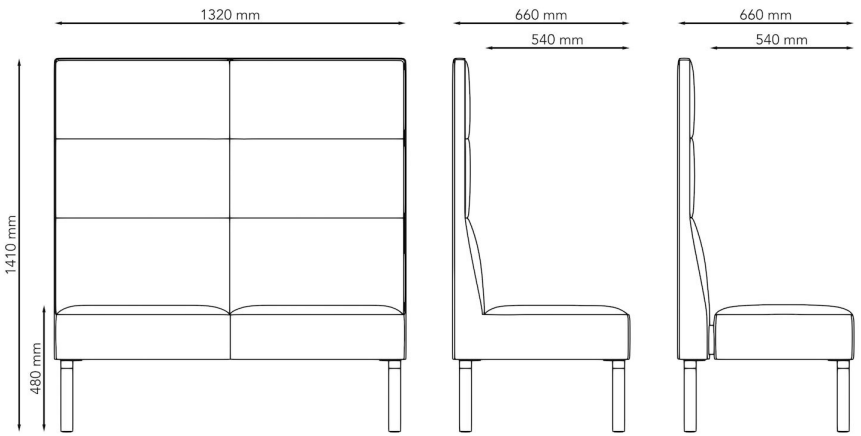

MODEL	Sofa	
VARIANTS	– Single-piece seat – Low back – Armrest – Wooden legs	– Seat with crumb gap – High back – Metal legs
ACCESSORIES	– Flexible table – Power and cable management – RAL Classic	
DETAILS	– Upholstery in one or two colours of fabric or leather. – Stand-alone or connectable units.	
CONSTRUCTION	Wooden seating frame made of board and solid wood. Cold-foam padding, fully upholstered. Round, straight solid-wood legs Ø45 mm.	
DIMENSIONS	Height: 1410 mm Depth: 660 mm	Width: 1320 mm Seat height: 480 mm
WEIGHT	34.5 kg	
TESTED	EN 16139, EN1728	

Möbelfakta

WARRANTY	5 years

Möbelfakta

Mingle Lounge

SOFA, 2-SEATER, HIGH BACK, SIDES RIGHT & LEFT

Mingle Lounge is a sofa series with generous dimensions, that provides relaxed seating in, for example, a lounge, hotel, restaurant or café. The many variants make it possible to create many shapes of seating in different sizes and heights. Bench, armchair, sofa and table can be varied and built together into both open and closed spaces. Place a two-seater sofa in the reception, or let Mingle meander through the office landscape.

Mingle Lounge sofa is available with two or three seats and is easy to vary with two back heights, and with or without armrests / high sides. In the high design, the sofa also serves as a slightly more secluded seat for furnishing the room-in-room and meeting area. A flexible table / tablet is available as an option, which is attached under the seat.

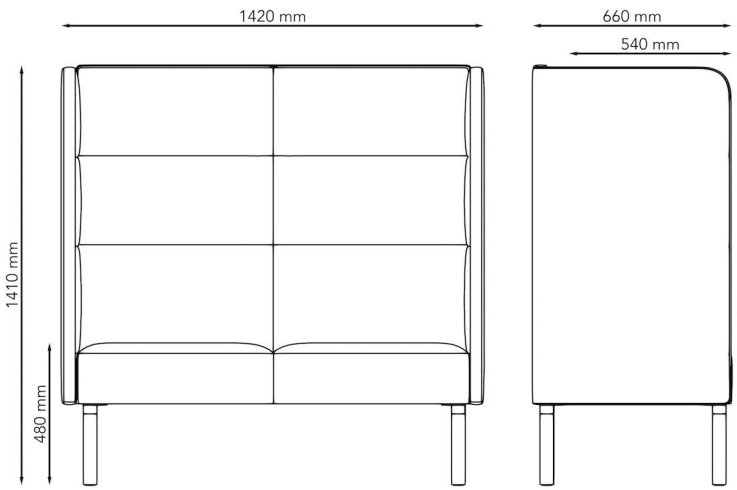

MODEL	Sofa	
VARIANTS	– Single-piece seat – Low back – Armrest – Wooden legs	– Seat with crumb gap – High back – Metal legs
ACCESSORIES	– Flexible table – Power and cable management – RAL Classic	
DETAILS	– Upholstery in one or two colours of fabric or leather. – Stand-alone or connectable units.	
CONSTRUCTION	Wooden seating frame made of board and solid wood. Cold-foam padding, fully upholstered. Round, straight solid-wood legs Ø45 mm.	
DIMENSIONS	Height: 1410 mm Depth: 660 mm	Width: 1420 mm Seat height: 480 mm
WEIGHT	57.3 kg	
TESTED	EN 16139, EN1728	

Möbelfakta

WARRANTY	5 years

Möbelfakta

Mingle Lounge

SOFA, 3-SEATER, HIGH BACK

Mingle Lounge is a sofa series with generous dimensions, that provides relaxed seating in, for example, a lounge, hotel, restaurant or café. The many variants make it possible to create many shapes of seating in different sizes and heights. Bench, armchair, sofa and table can be varied and built together into both open and closed spaces. Place a two-seater sofa in the reception, or let Mingle meander through the office landscape.

Mingle Lounge sofa is available with two or three seats and is easy to vary with two back heights, and with or without armrests / high sides. In the high design, the sofa also serves as a slightly more secluded seat for furnishing the room-in-room and meeting area. A flexible table / tablet is available as an option, which is attached under the seat.

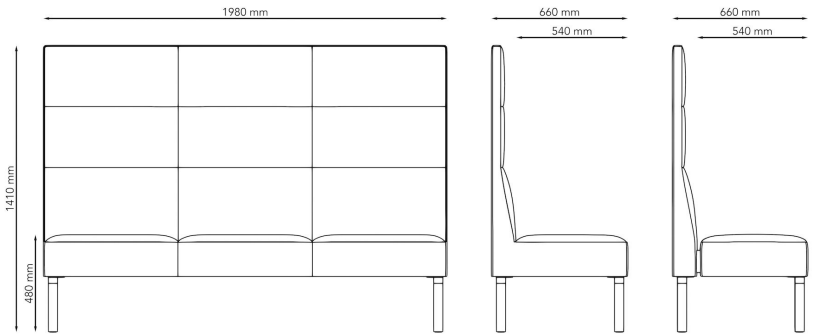

MODEL	Sofa	
VARIANTS	– Single-piece seat – Low back – Armrest – Wooden legs	– Seat with crumb gap – High back – Metal legs
ACCESSORIES	– Flexible table – Power and cable management – RAL Classic	
DETAILS	– Upholstery in one or two colours of fabric or leather. – Stand-alone or connectable units.	
CONSTRUCTION	Wooden seating frame made of board and solid wood. Cold-foam padding, fully upholstered. Round, straight solid-wood legs Ø45 mm.	
DIMENSIONS	Height: 1410 mm Depth: 660 mm	Width: 1980 mm Seat height: 480 mm
WEIGHT	48.2 kg	
TESTED	EN 16139, EN1728	

Möbelfakta

WARRANTY	5 years

Möbelfakta

Mingle Lounge

SOFA, 3-SEATER, HIGH BACK, SIDES RIGHT & LEFT

Mingle Lounge is a sofa series with generous dimensions, that provides relaxed seating in, for example, a lounge, hotel, restaurant or café. The many variants make it possible to create many shapes of seating in different sizes and heights. Bench, armchair, sofa and table can be varied and built together into both open and closed spaces. Place a two-seater sofa in the reception, or let Mingle meander through the office landscape.

Mingle Lounge sofa is available with two or three seats and is easy to vary with two back heights, and with or without armrests / high sides. In the high design, the sofa also serves as a slightly more secluded seat for furnishing the room-in-room and meeting area. A flexible table / tablet is available as an option, which is attached under the seat.

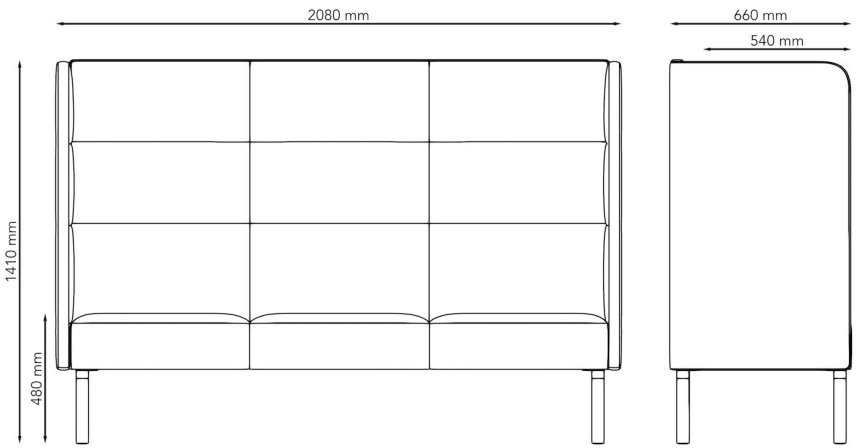

MODEL	Sofa	
VARIANTS	– Single-piece seat – Low back – Armrest – Wooden legs	– Seat with crumb gap – High back – Metal legs
ACCESSORIES	– Flexible table – Power and cable management – RAL Classic	
DETAILS	– Upholstery in one or two colours of fabric or leather. – Stand-alone or connectable units.	
CONSTRUCTION	Wooden seating frame made of board and solid wood. Cold-foam padding, fully upholstered. Round, straight solid-wood legs Ø45 mm.	
DIMENSIONS	Height: 1410 mm Depth: 660 mm	Width: 2080 mm Seat height: 480 mm
WEIGHT	71.0 kg	
TESTED	EN 16139, EN1728	

Möbelfakta

WARRANTY	5 years

Möbelfakta

Mingle Lounge

FLEXIBLE TABLE

Mingle Lounge is a sofa series with generous dimensions, that provides relaxed seating in, for example, a lounge, hotel, restaurant or café. The many variants make it possible to create many shapes of seating in different sizes and heights. Bench, armchair, sofa and table can be varied and built together into both open and closed spaces. Place a two-seater sofa in the reception, or let Mingle meander through the office landscape.

Mingle Lounge sofa is available with two or three seats and is easy to vary with two back heights, and with or without armrests / high sides. In the high design, the sofa also serves as a slightly more secluded seat for furnishing the room-in-room and meeting area. A flexible table / tablet is available as an option, which is attached under the seat.

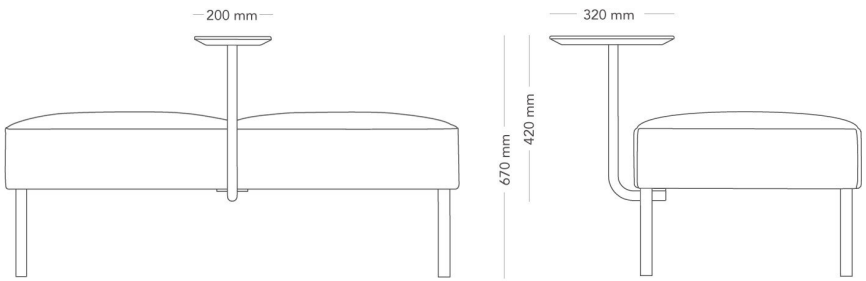

MODEL	Sofa	
VARIANTS	– Single-piece seat – Low back – Armrest – Wooden legs	– Seat with crumb gap – High back – Metal legs
ACCESSORIES	– Flexible table – Power and cable management – RAL Classic	
DETAILS	– Upholstery in one or two colours of fabric or leather. – Stand-alone or connectable units.	
CONSTRUCTION	Wooden seating frame made of board and solid wood. Cold-foam padding, fully upholstered. Round, straight solid-wood legs Ø45 mm.	
DIMENSIONS	Height: 420 mm Width: 200 mm Depth: 320 mm	
WEIGHT	5.9 kg	
TESTED	EN 16139, EN1728	

Möbelfakta

WARRANTY	5 years

Möbelfakta