Izi Effect

DESK FRAME, MANUAL HEIGHT ADJUSTMENT

Izi Effect is a series of stationary workstations and conference tables whith manual height adjustment. The table has metal frame with rectangular legs and T-foot.

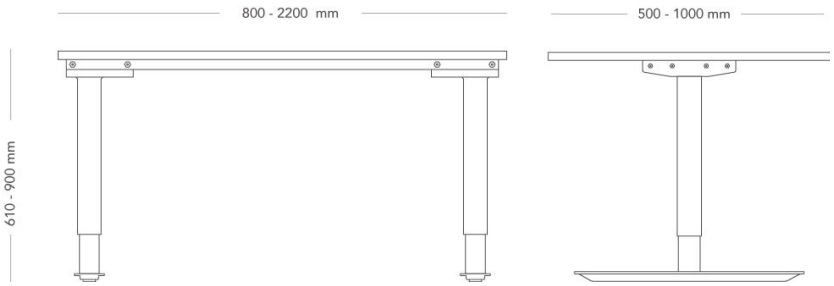

MODEL	Desk frame, manual height adjustment
VARIANTS	– For rectangular tops – For corner tops – For desk combinations
ACCESSORIES	– Power and cable management – Accessories for table screens – Table screen – Standing mat
CONSTRUCTION	Manually adjustable frame with rectangular legs in steel profile and a T-foot in sheet steel, with adjustable feet in plastic and metal. Height adjustment 610–900 mm. Continuously adjustable frame rails in powder-coated sheet steel, adjustable 1050–1930 mm, suitable for table tops 1200–2000 mm in length.
DIMENSIONS	Height: 610-900 mm Length: 800 - 2200 mm Width: 500 - 1000 mm
TESTED	EN 15372:2016, EN 1730:2012.
WARRANTY	5 years

Izi Effect

DESK FRAME, MANUAL HEIGHT ADJUSTMENT, 3 LEGS

Izi Effect is a series of stationary workstations and conference tables whith manual height adjustment. The table has metal frame with rectangular legs and T-foot.

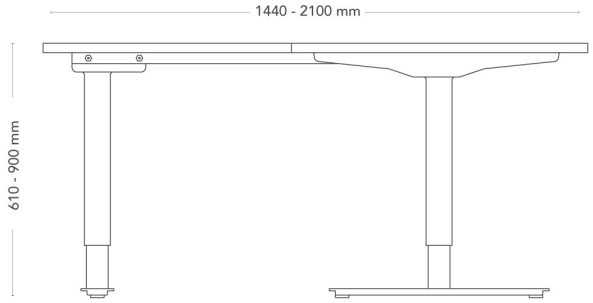

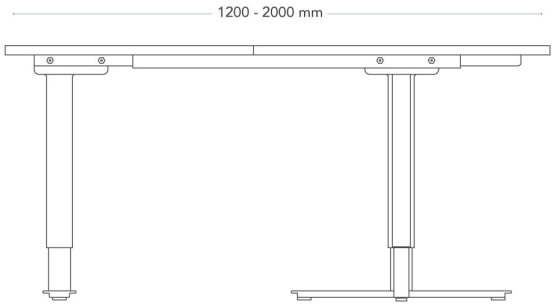

MODEL	Desk frame, manual height adjustment
VARIANTS	– For rectangular tops – For corner tops – For desk combinations
ACCESSORIES	– Power and cable management – Accessories for table screens – Table screen – Standing mat
CONSTRUCTION	Manually adjustable frame with rectangular legs in steel profile and a T-foot in sheet steel, with adjustable feet in plastic and metal. Height adjustment 610–900 mm. Continuously adjustable frame rails in powder-coated sheet steel, adjustable 1050–1930 mm, suitable for table tops 1200–2000 mm in length.
DIMENSIONS	Height: 610-900 mm Length: 1440 - 2100 mm Width: 1200 - 2000 mm
TESTED	EN 15372:2016, EN 1730:2012.
WARRANTY	5 years

Izi Effect

DESK FRAME, MANUAL HEIGHT ADJUSTMENT

Izi Effect is a series of stationary workstations and conference tables whith manual height adjustment. The table has metal frame with rectangular legs and T-foot.

Height is continuously adjustable within the range 610–900 mm; the stated height includes a 22 mm table top.

617301: 2-leg frame for rectangular table tops, continuously adjustable frame rails adjustable within the range 1050–1915 mm. Suitable for table tops width 730–1000 mm, length 1200–2200 mm.

617304R: 2-leg frame for right-hand corner table tops; 1 × 700 mm foot, 1 × 900 mm foot, 1 × 500 mm bracket and 1 × 800 mm bracket. Suitable for table tops width 1000/700–1200/900 mm, length 1200–2200 mm.

617304L: 2-leg frame for left-hand corner table tops; 1 × 700 mm foot, 1 × 900 mm foot, 1 × 500 mm bracket and 1 × 800 mm bracket. Suitable for table tops width 1000/700–1200/900 mm, length 1200–2200 mm.

617312: Frame for connection to a freestanding table, continuously adjustable frame rails adjustable within the range 1050–1915 mm. For table tops width 500–729 mm, length 1600–2600 mm (including the width of the freestanding table). 1 × 500 mm foot. Can be installed in a 90° corner configuration.

617415: 2-leg frame for rectangular table tops, suitable for table tops width 500–700 mm, length 800–1000 mm. 2 × 500 mm feet, 2 × 350 mm brackets. Fixed with angle brackets.

617416: 2-leg frame for rectangular table tops, suitable for table tops width 730–900 mm, length 800–1000 mm. 2 × 700 mm feet, 2 × 500 mm brackets. Fixed with angle brackets.

617317: 2-leg frame for rectangular table tops, suitable for table tops width 500–729 mm, length 1200–2200 mm. 2 × 500 mm feet, 2 × 350 mm brackets.

MODEL	Desk frame, manual height adjustment
VARIANTS	– For rectangular tops – For corner tops – For desk combinations
ACCESSORIES	– Power and cable management – Accessories for table screens – Table screen – Standing mat
TESTED	EN 15372:2016, EN 1730:2012.
WARRANTY	5 years